an ISO 9001:2008 Registered Company

1955-56 Chevrolet Full-Size

with **4-Vent Plenum Evaporator Kit (56156-PCZ)**

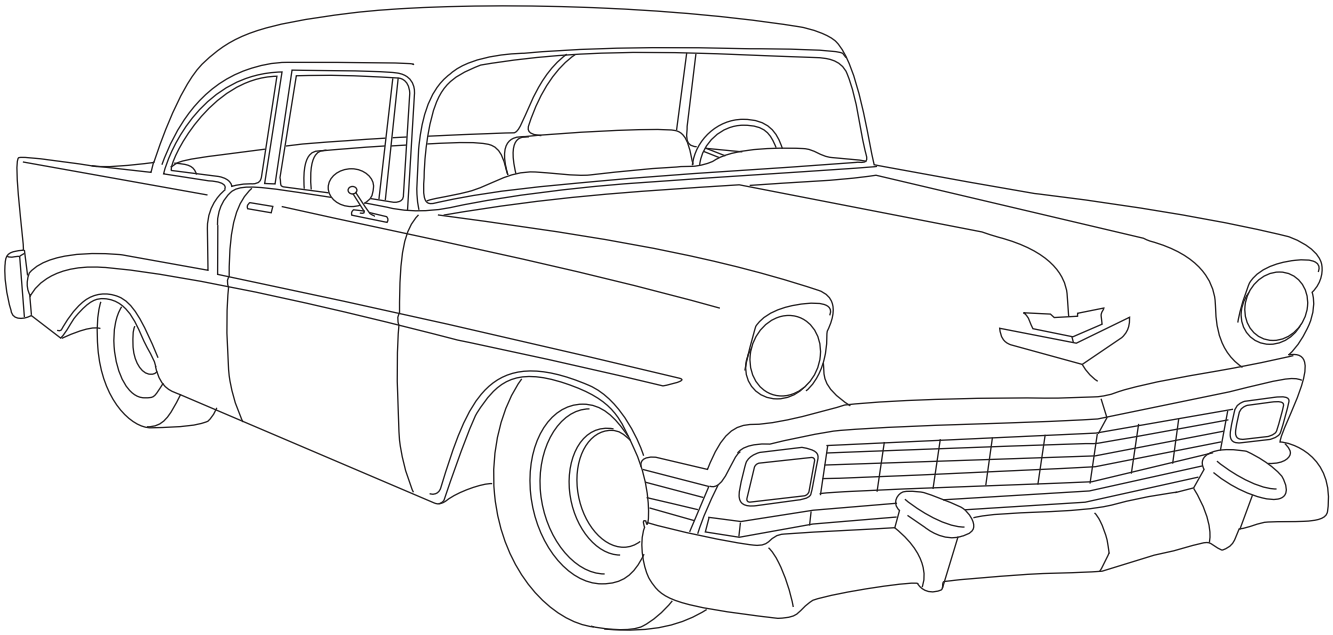

18865 Goll St. San Antonio, TX 78266
Phone: 210-654-7171
Fax: 210-654-3113
www.vintageair.com

www.vintageair.com

Table of Contents

Thank you for purchasing this evaporator kit from Vintage Air. When installing these components as part of a complete SureFit™ system, Vintage Air recommends working from front to back on the vehicle, installing the condenser kit, hose kit, and compressor first, followed by the wiring, evaporator, and finally the control panel.

Cover.....1
Table of Contents.....2
Packing List/Parts Disclaimer.....3
Information Page.....4
Wiring Notice.....5
Engine Compartment Disassembly, Passenger Compartment Disassembly.....6
Condenser Assembly Installation, Core Support Modification.....7
Compressor and Brackets, Pulleys, Defrost Duct Installation, Control Panel Conversion.....8
Evaporator Installation.....9
Evaporator Installation (Cont.).....10
Center Vent Installation, Under Dash Louver Installation, Drain Hose Installation.....11
Lubricating O-rings, Heater Control Valve Installation.....12
A/C Hardline and Hose Installation, Liquid Line Installation.....13
A/C and Heater Hose Routing.....14
Firewall Cover Installation.....15
Control Panel & Duct Hose Routing.....16
Glove Box Installation, Final Steps.....17
Evaporator Hardline Installation.....18
Wiring Diagram.....19
Gen IV Wiring Connection Instruction.....20
Operation of Controls.....21
Troubleshooting Guide.....22
Troubleshooting Guide (Cont.).....23
Core Support Modification Template.....24
Packing List.....25

www.vintageair.com

Packing List: Evaporator Kit (56156-PCZ)

No.	Qty.	Part No.	Description
1.	1	744004-VUE	Gen IV Evaporator Sub Case 4-Vent Plenum with 204 ECU
2.	1	78256-PCN	Accessory Kit

**** Before beginning installation, open all packages and check contents of shipment. Please report any shortages directly to Vintage Air within 15 days. After 15 days, Vintage Air will not be responsible for missing or damaged items.**

1

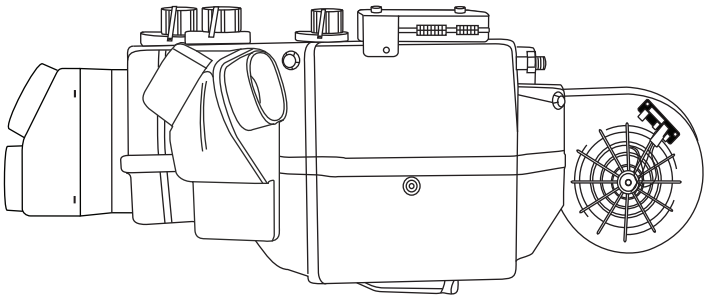

Gen IV Evaporator Sub Case 4-Vent Plenum with 204 ECU 744004-VUE

2

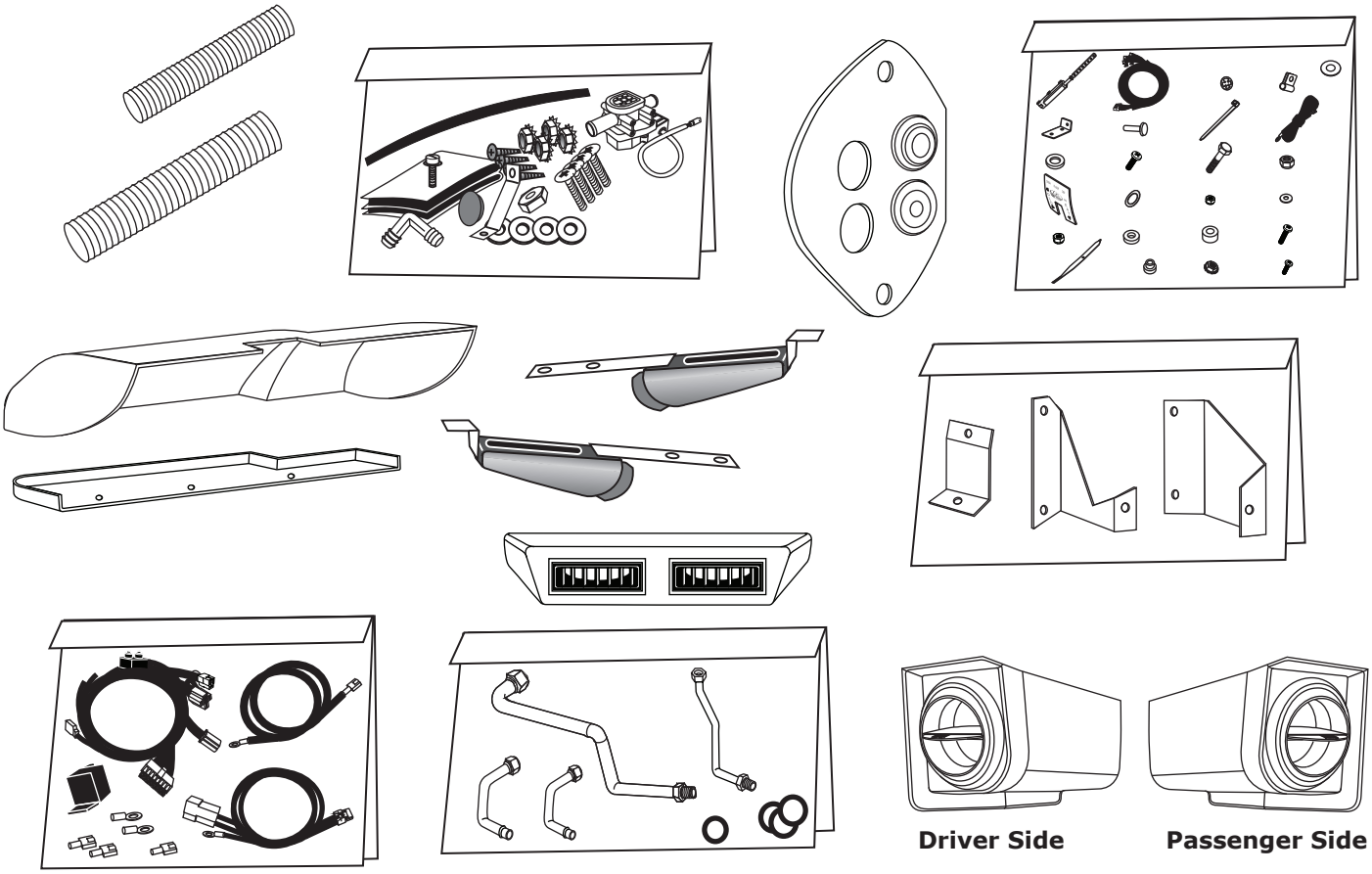

Accessory Kit 78256-PCN

NOTE: Images may not depict actual parts and quantities. Refer to packing list for actual parts and quantities.

www.vintageair.com

Important Notice—Please Read

For Maximum System Performance, Vintage Air Recommends the Following:

NOTE: Vintage Air systems are designed to operate with R134a refrigerant only. Use of any other refrigerant could damage your A/C system and/or vehicle, and possibly cause a fire, in addition to potentially voiding the warranties of the A/C system and its components.

Refrigerant Capacities:

Vintage Air System: 1.8 lbs. (1 lb., 12 oz.) of **R134a**, charged by weight with a quality charging station or scale. **NOTE: Use of the proper type and amount of refrigerant is critical to system operation and performance.**

Other Systems: Consult manufacturer's guidelines.

Lubricant Capacities:

New Vintage Air-supplied Sanden Compressor: No additional oil needed (Compressor is shipped with proper oil charge).

All Other Compressors: Consult manufacturer (Some compressors are shipped dry and will need oil added).

Safety Switches

Your Vintage Air system is equipped with a binary pressure safety switch. A binary switch disengages the compressor clutch in cases of extreme low pressure conditions (Refrigerant Loss) or excessively high head pressure (406 PSI) to prevent compressor damage or hose rupture. A trinary switch combines Hi/Lo pressure protection with an electric fan operation signal at 254 PSI, and should be substituted for use with electric fans. Compressor safety switches are extremely important since an A/C system relies on refrigerant to circulate lubricant.

Service Info:

Protect Your Investment: Prior to assembly, it is critical that the compressor, evaporator, A/C hoses and fittings, hardlines, condenser and receiver/drier remained capped. Removing caps prior to assembly will allow moisture, insects and debris into the components, possibly leading to reduced performance and/or premature failure of your A/C system. This is especially important with the receiver/drier.

Additionally, when caps are removed for assembly, **BE CAREFUL!** Some components are shipped under pressure with dry nitrogen.

Evacuate the System for 35-45 Minutes: Ensure that system components (Drier, compressor, evaporator and condenser) are at a temperature of at least 85° F. On a cool day, the components can be heated with a heat gun ***or*** by running the engine with the heater on before evacuating. Leak check and charge to specifications.

Bolts Passing Through Cowl and/or Firewall:

To ensure a watertight seal between the passenger compartment and the vehicle exterior, for all bolts passing through the cowl and/or firewall, Vintage Air recommends coating the threads with silicone prior to installation.

Heater Hose (Not Included With This Kit):

Heater hose may be purchased from Vintage Air (Part# 31800-VUD) or your local parts retailer. Routing and required length will vary based on installer preference.

Important Wiring Notice—Please Read

Some Vehicles May Have Had Some or All of Their Radio Interference Capacitors Removed. There Should Be a Capacitor Found At Each of the Following Locations:

1. On the positive terminal of the ignition coil.
2. If there is a generator, on the armature terminal of the generator.
3. If there is a generator, on the battery terminal of the voltage regulator.

Most alternators have a capacitor installed internally to eliminate what is called "whining" as the engine is revved. If whining is heard in the radio, or just to be extra cautious, a radio interference capacitor can be added to the battery terminal of the alternator.

It is also important that the battery lead is in good shape and that the ground leads are not compromised. There should be a heavy ground from the battery to the engine block, and additional grounds to the body and chassis.

If these precautions are not observed, it is possible for voltage spikes to be present on the battery leads. These spikes come from ignition systems, charging systems, and from switching some of the vehicle's other systems on and off. Modern computer-operated equipment can be sensitive to voltage spikes on the power leads, which can cause unexpected resets, strange behavior, and/or permanent damage.

Vintage Air strives to harden our products against these types of electrical noise, but there is a point where a vehicle's electrical system can be degraded so much that nothing can help.

Radio interference capacitors should be available at most auto and truck parts suppliers. They typically are cylindrical in shape, a little over an inch long, a little over a half inch in diameter, and they have a single lead coming from one end of the cylinder with a terminal on the end of the wire, as well as a mounting clip which is screwed into a good ground on the vehicle. The specific value of the capacitance is not too significant in comparison to ignition capacitors that are matched with the coil to reduce pitting of the points.

- Care must be taken, when installing the compressor lead, not to short it to ground. The compressor lead must not be connected to a condenser fan or to any other auxiliary device. Shorting to ground or connecting to a condenser fan or any other auxiliary device may damage wiring, the compressor relay, and/or cause a malfunction.
- When installing ground leads on Gen IV systems, the blower control ground and ECU ground must be connected directly to the negative battery post.
- For proper system operation, the heater control valve must be connected to the ECU.

www.vintageair.com

Engine Compartment Disassembly

NOTE: Before starting the installation, check the function of the vehicle (horn, lights, etc.) for proper operation, and study the instructions, illustrations, & diagrams.

Perform the Following:

1. Disconnect battery.
2. Remove battery and battery tray.
3. Remove air cleaner.
4. Drain radiator.
5. Disconnect heater hoses.

Passenger Compartment Disassembly

Perform the Following:

1. Remove the OEM heater assembly by removing the control cables, along with (2) 7/16” nuts on the firewall and (1) under the dash (discard).
2. Remove the heater blower (discard) (See Figure 1, below).
3. Remove the butterfly duct above the kick panel vent, as well as the panel flange (discard). Install the new vent cover as shown in Figure 2, below.
4. Remove the glove box door (retain).
5. Remove the glove box (discard).
6. Remove the original defrost duct from the heater to the windshield (discard).
7. Remove the ash tray (retain).
8. Remove the ash tray slider assembly (retain).
9. Remove the vent and cables from the dash (retain) (See Figure 1, below).
10. Remove the control panel (retain).
11. Remove the passenger side speaker grille (retain) (See Figure 1, below).

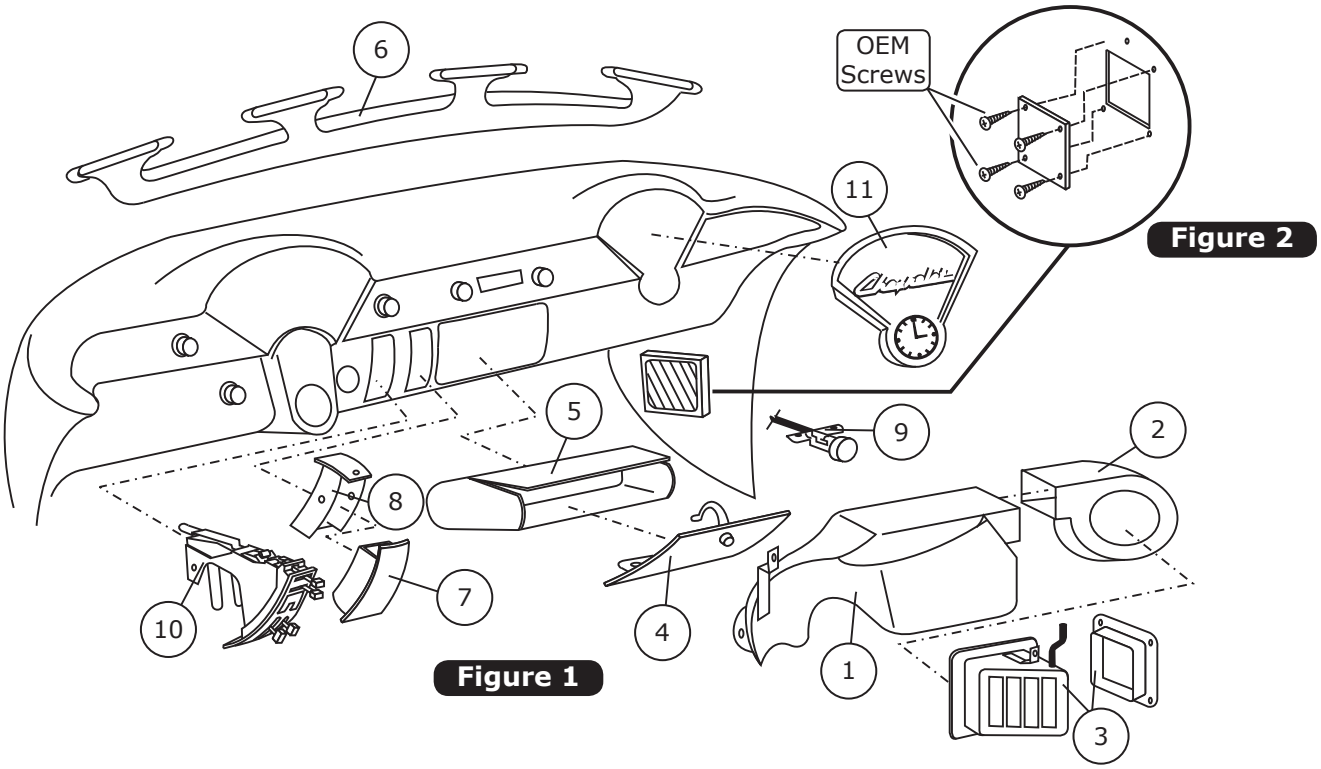

www.vintageair.com

Condenser Assembly Installation

1. Loosen the (6) bolts that secure the radiator to the core support.
2. Slide the condenser assembly into position. The condenser brackets will be held between the radiator and the core support. Secure with the (6) radiator bolts (See Figures 3 and 3b, below). Holding the condenser in position, tighten the (6) radiator bolts.

Core Support Modification

1. Locate the core support modification template on Page 24, and align the template on the passenger side of the core support panel. Using the template, mark holes and cut a 1 ¼" hole using a hole saw. Drill a 5/16" hole in the noted location (See Figure 3a, below).
2. Install the #6 and #8 condenser hardlines through the 1 ¼" hole. Lubricate a #6 and #8 O-ring as shown in Figure 11, Page 12, and connect the #6 and #8 condenser hardlines to the condenser.
3. Locate the split grommet and install as shown in Figure 3b, below.
4. Install the drier loosely as shown in Figure 3b, below. **NOTE: Refrigerant flow follows the arrow on the drier.**

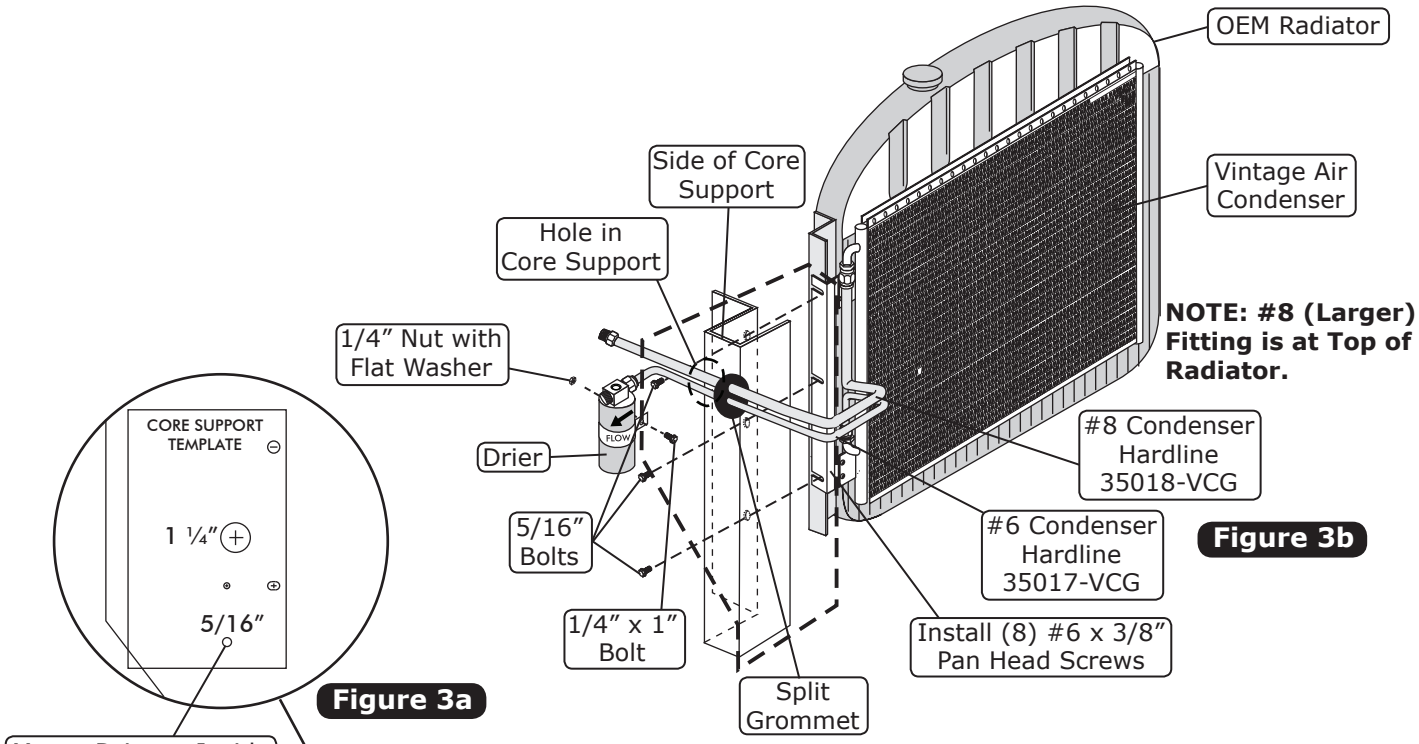

Figure 3b

Figure 3a

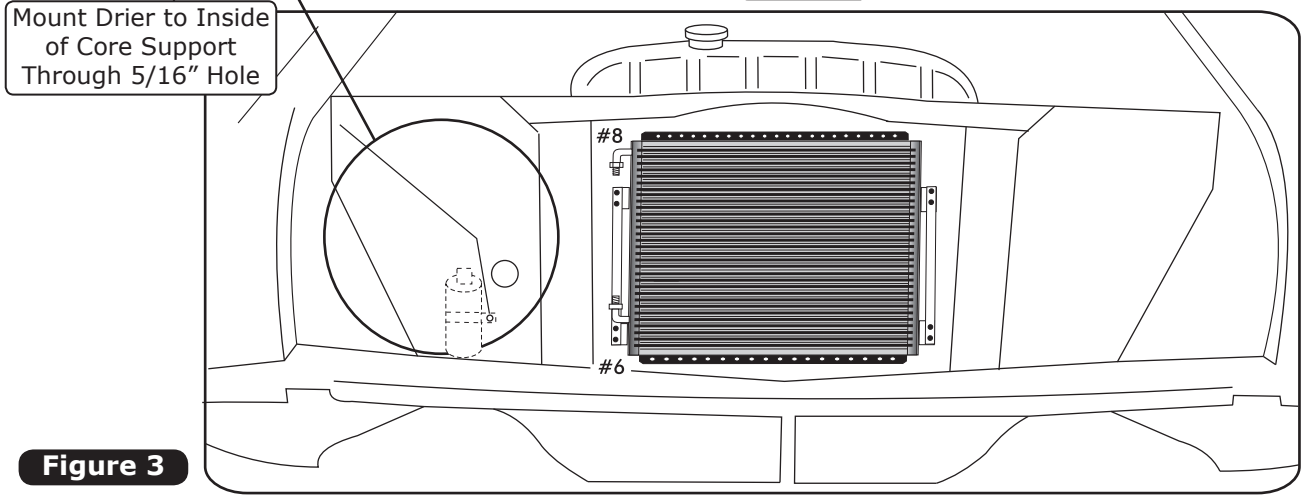

Figure 3

Compressor and Brackets

1. Refer to separate instructions included with the bracket kit to install the compressor bracket. Refer to Figure 4, below, for compressor mounting position.

Pulleys

1. In most instances, the belt lengths will remain the same (See Figure 4, below).

Pulleys (Vintage Air) Short Pump Small Block Chevrolet (Steel Pulley)

22503-VCA	Water Pump Pulley (2-Groove)
22506- VCA	Crankshaft Pulley (2-Groove) (With Power Steering, a 3-Groove Crank Pulley is Required)
22507-VCA	Crankshaft Pulley (3-Groove)

NOTE: Belt routing may vary with different bracket sets. Always refer to instructions included with brackets.

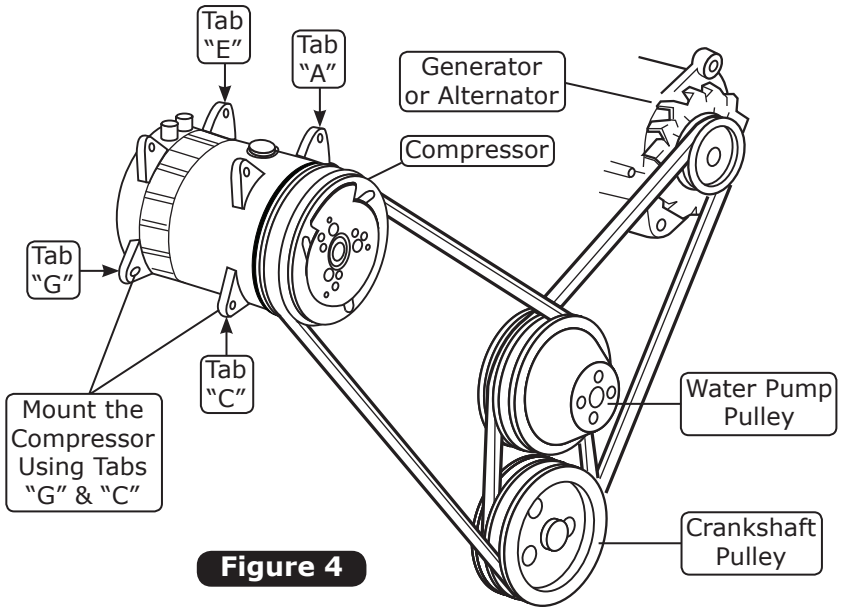

Figure 4

Defrost Duct Installation

1. Install the defrost ducts with 2" duct hose: 10" (passenger side) and 24" (driver side) (See Figure 5, below, and Figure 15, Page 16).

2. Install the defrost ducts (See Figures 5 and 5a, below). **NOTE: The rounded side of the defrost ducts face the passenger compartment.**

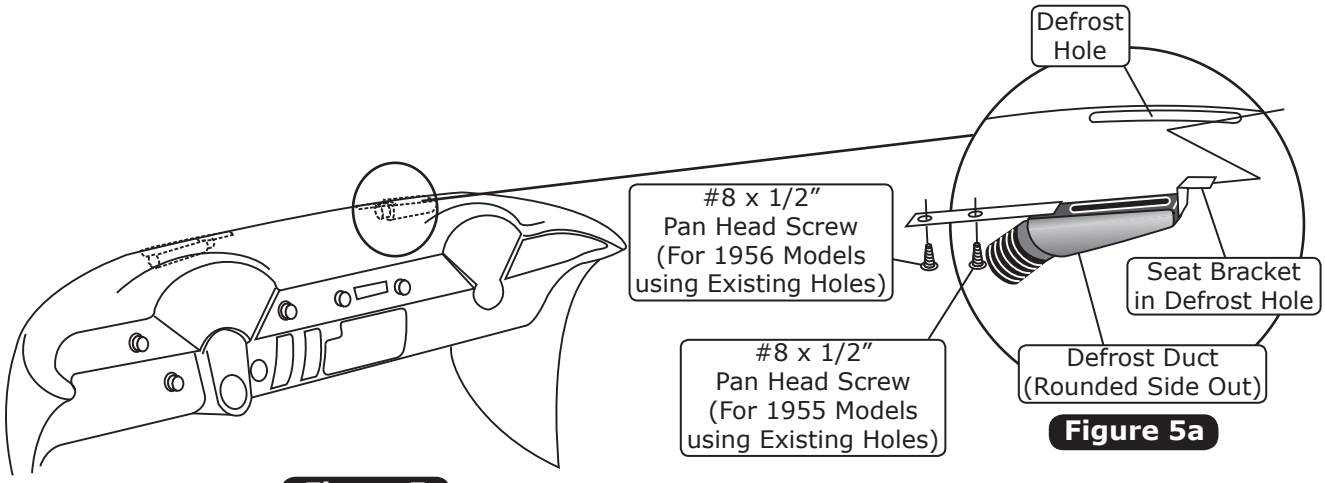

Figure 5a

Figure 5

Control Panel Conversion

1. Locate the control panel conversion kit. Refer to the instructions supplied with the conversion kit to assemble the control panel.

Evaporator Installation

NOTE: To ensure a watertight seal between the passenger compartment and the vehicle exterior, for all bolts passing through the firewall, Vintage Air recommends coating the threads with silicone prior to installation.

1. On a workbench, install the evaporator rear brackets and the evaporator hardlines with properly lubricated O-rings (See Figure 17, Page 18, and Figure 11, Page 12).
2. Lift the evaporator unit up and under the dashboard (See Figures 6 and 6a, below, and Figure 6b, Page 10). Secure loosely to the firewall from the engine compartment side with (2) 1/4-20 x 1” bolts and washers (See Figure 7, Page 10, and Figure 17, Page 18). **NOTE: To ensure proper drainage, it is very important that the evaporator is level, both left-right and fore-aft. Check for level on the flat portions of the case around the drain.**
3. Install the front mounting bracket to the evaporator unit using a 1/4-20 button head bolt, and tighten as shown in Figure 7, Page 10. Loosely attach the front mounting bracket to the dash with a 1/4-20 x 1” bolt, washer and nut (See Figure 7, Page 10).
4. Install the 4-vent A/C plenum to the evaporator with (2) 10-32 x 1/2” screws (See Figure 7, Page 10).
5. Verify that the evaporator unit is level and square to the dash, then tighten all mounting bolts. **NOTE: Tighten the (2) bolts on the firewall first. Then tighten the front mounting bracket bolt and nut. Tighten the center plenum mounting bolt last.**

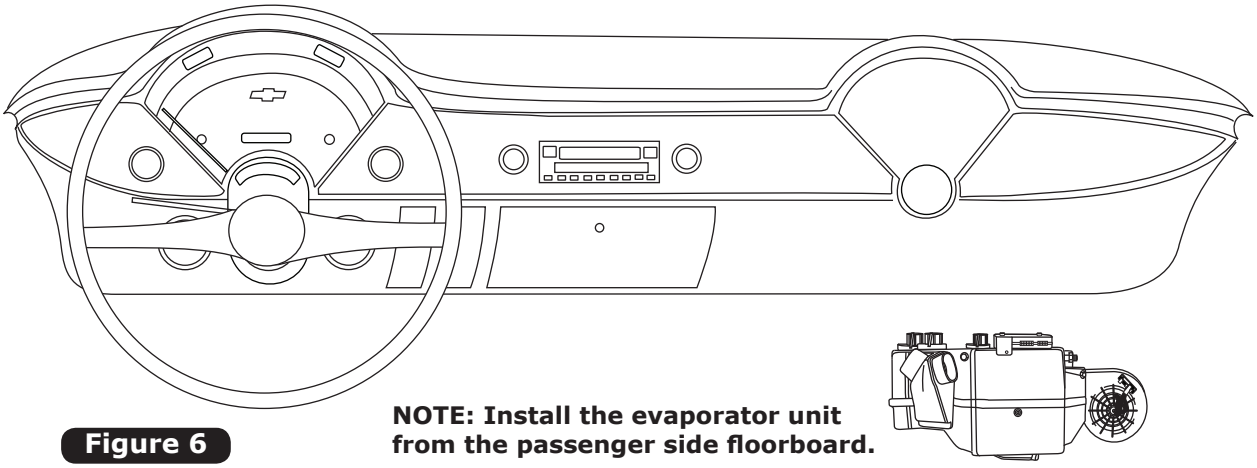

Figure 6

NOTE: Install the evaporator unit from the passenger side floorboard.

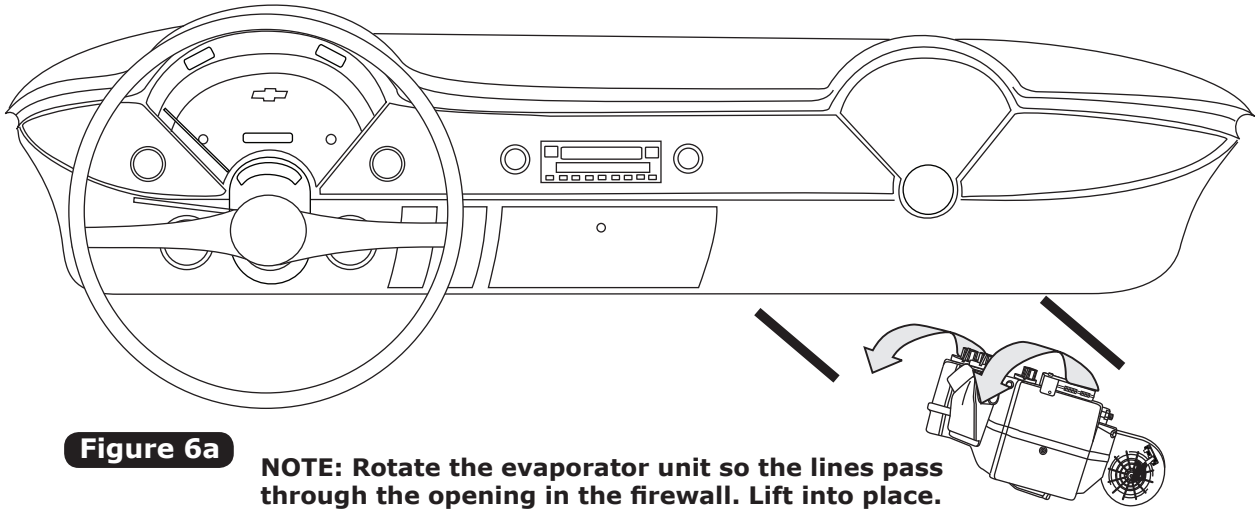

Figure 6a

NOTE: Rotate the evaporator unit so the lines pass through the opening in the firewall. Lift into place.

Evaporator Installation (Cont.)

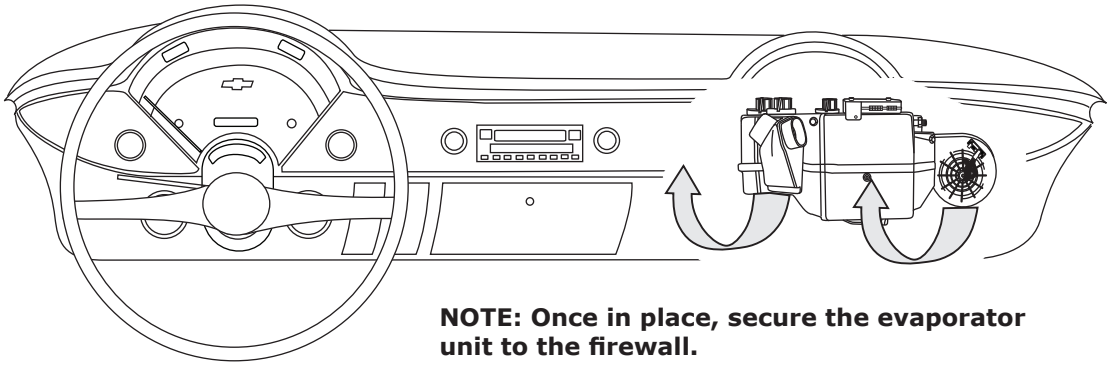

NOTE: Once in place, secure the evaporator unit to the firewall.

Figure 6b

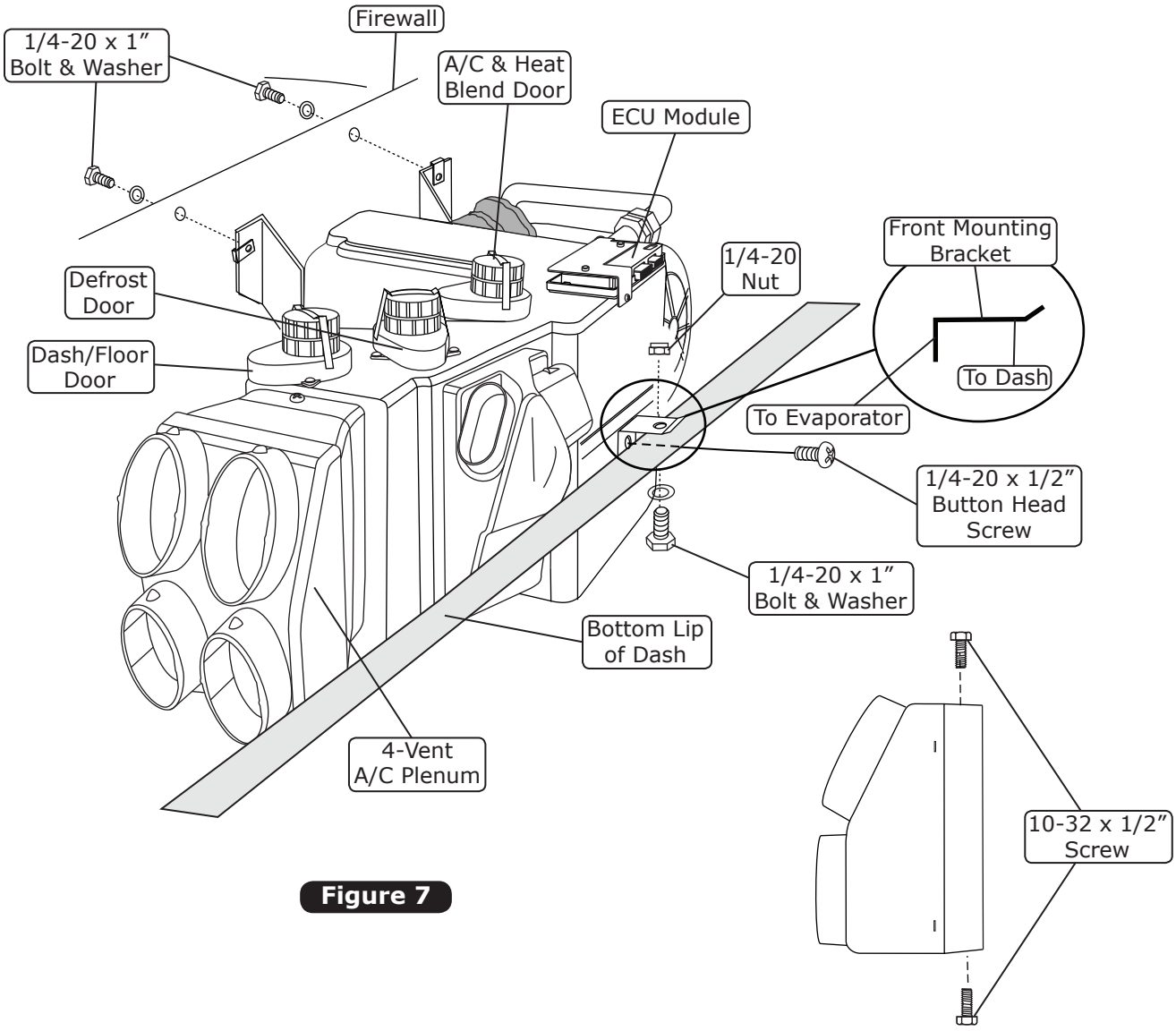

Figure 7

Center Vent Installation

1. Place the center vent under the dash in the desired position (See Figure 8, below). Drill (2) 1/8” mounting holes into the bottom lip of the dash, and secure the center vent to the dash using (2) #8 x 1/2” pan head screws (See Figure 8, below).

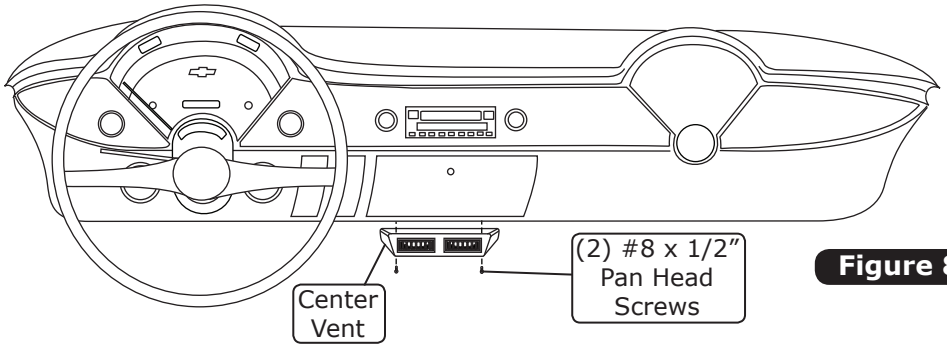

Figure 8

Under Dash Louver Installation

1. Install the driver and passenger side under dash louvers with the flange facing the dash and kick panel as shown in Figure 9, below. Tuck the kick panel side of the louver flange behind the kick panel windlace retainer, and slide the louver up until the flange is seated against the dash. Secure the louver to the kick panel with (2) #8 x 1/2” pan head screws (See Figure 9, below). **NOTE: In most cases, the louvers will fit as described. However, due to dash and kick panel variances, the presence of aftermarket components or modifications, etc., it may be necessary to trim the louver flange and/or slightly move the parking brake lever for proper fit.**

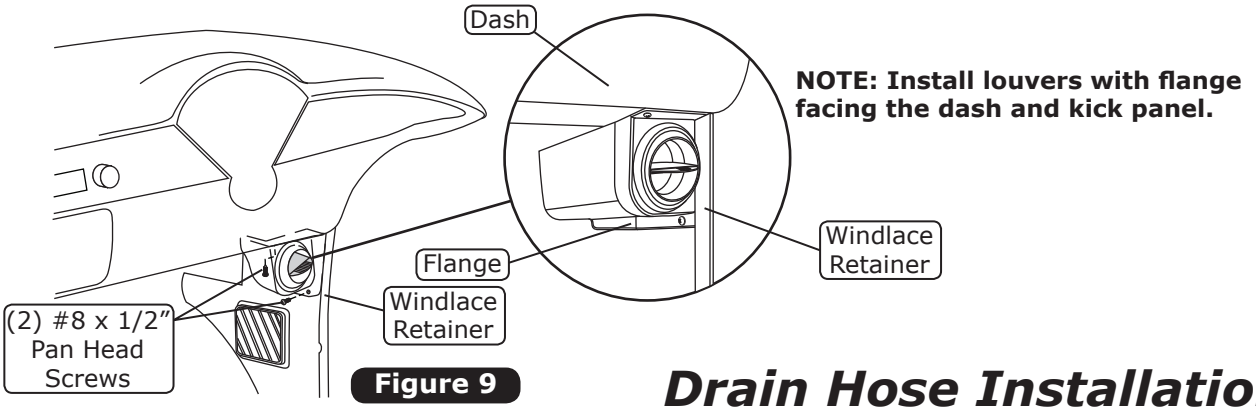

Figure 9

Drain Hose Installation

1. In line with the drain, lightly make a mark on the firewall. Measure 1” down and drill a 5/8” hole through the firewall (See Figure 10, below). **NOTE: See Figure 14, Page 15, for the rough location of the drain hole.**
2. Install the drain hose onto the bottom of the evaporator unit, and route through the firewall (See Figure 10, below, and Figure 14, Page 15).

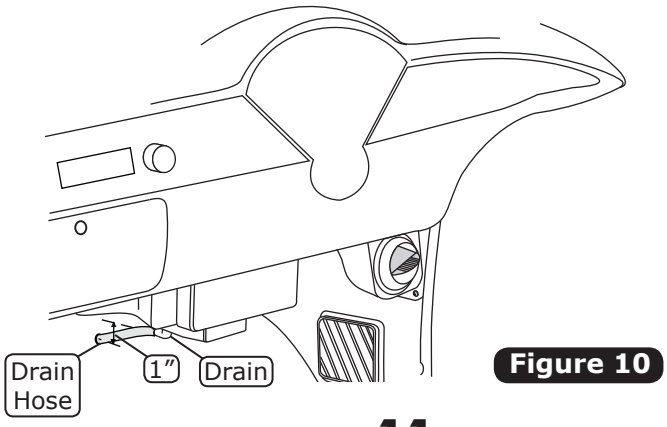

Figure 10

Lubricating O-rings

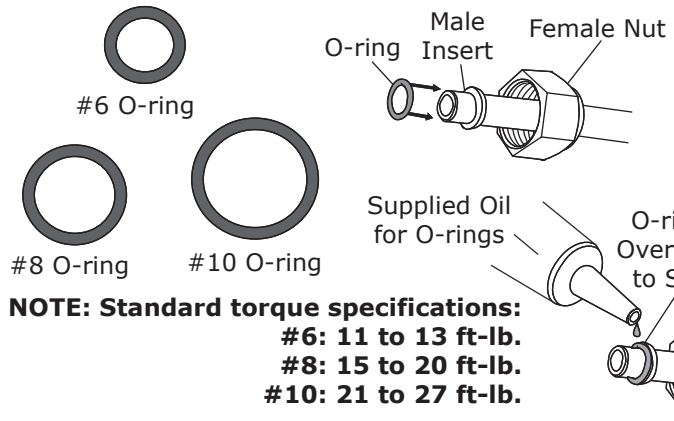

For a proper seal of fittings: Install supplied O-rings as shown, and lubricate with supplied oil.

NOTE: Standard torque specifications:
#6: 11 to 13 ft-lb.
#8: 15 to 20 ft-lb.
#10: 21 to 27 ft-lb.

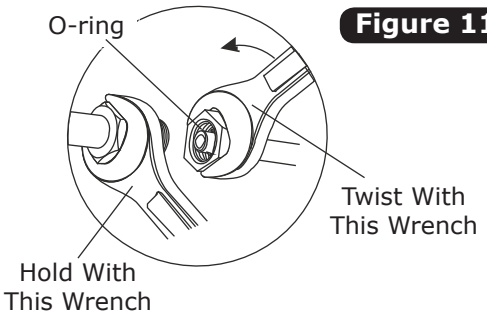

Figure 11

Heater Control Valve Installation

1. Install the heater control valve in line with the intake manifold (pressure side) heater hose (See Figure 12, below).

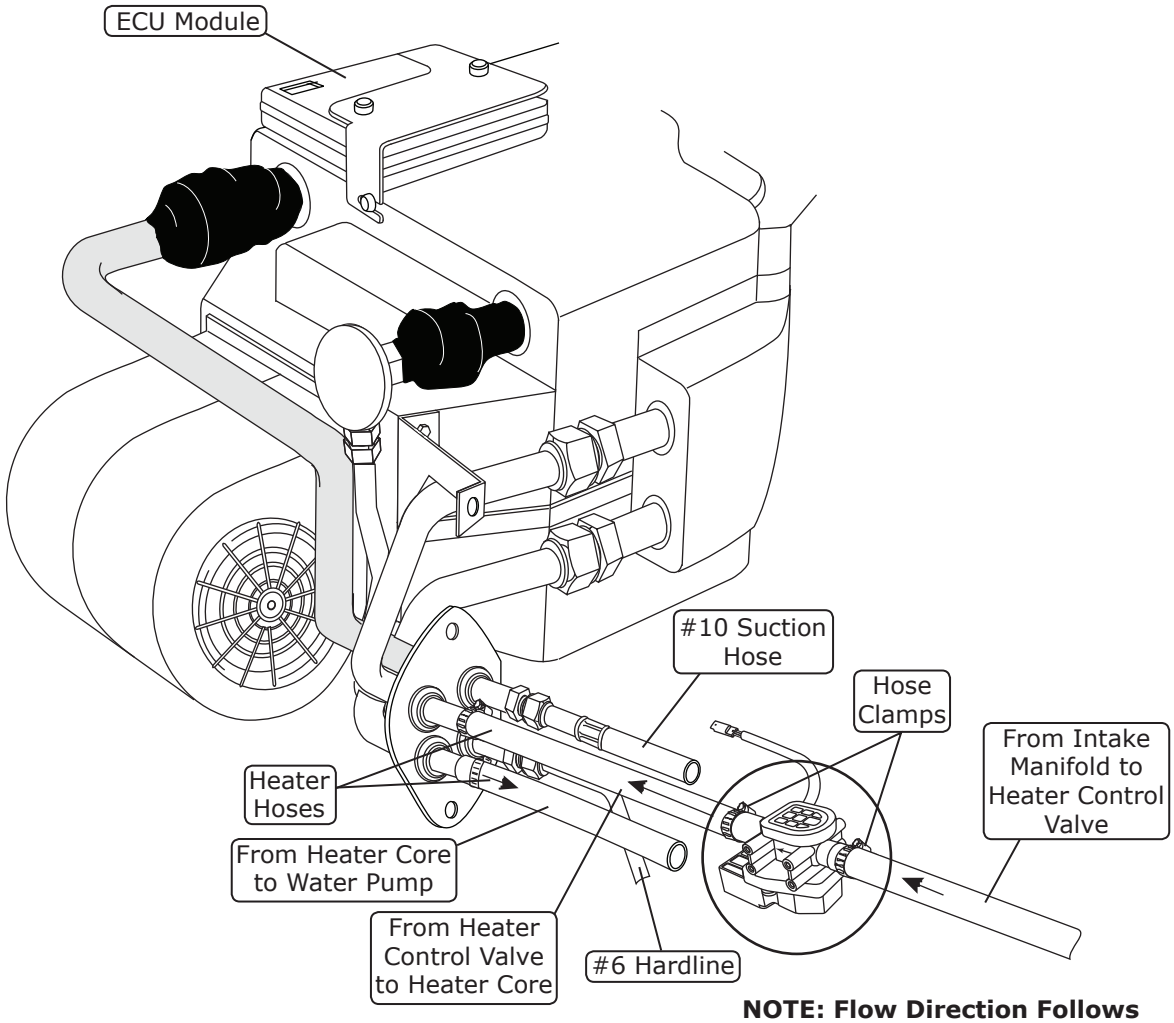

NOTE: Flow Direction Follows Molded Arrow on Valve.

Figure 12

A/C Hardline and Hose Installation

Standard Hose Kit:

1. Locate the (2) compressor hardlines (See Figure 13, Page 14).
2. Locate the #8 compressor hardline. Lubricate (1) #8 O-ring (See Figure 11, Page 12), and connect the #8 compressor hardline to the #8 discharge port on the compressor. Tighten the connection (See Figure 11, Page 12, and Figure 13, Page 14).
3. Locate the #10 compressor hardline. Lubricate (1) #10 O-ring (See Figure 11, Page 12), and connect the #10 compressor hardline to the #10 suction port on the compressor. Tighten the connection (See Figure 11, Page 12, and Figure 13, Page 14).
4. Secure the (2) compressor hardlines to the compressor using the supplied clamp (See Figure 13a, Page 14).
5. Locate the #8 A/C hose. The hose will connect the #8 compressor hardline and the #8 hardline from the condenser. Lubricate (2) #8 O-rings (See Figure 11, Page 12) and install (1) onto each end of the #8 A/C hose. Route the #8 A/C hose as shown in Figure 13, Page 14 and tighten (See Figure 11, Page 12). **NOTE: The 90° hose fitting connects to the #8 condenser hardline.**
6. Install the firewall cover (See Figure 14, Page 15).
7. Lubricate (1) #6 O-ring (See Figure 11, Page 12). Install the #6 liquid line and tighten (See Figure 11, Page 12, and Figure 13b, Page 14).
8. Locate the #10 A/C hose. The hose will connect the #10 compressor hardline and the #10 hardline from the evaporator. Lubricate (2) #10 O-rings (See Figure 11, Page 12) and install (1) onto each end of the #10 A/C hose. Route the #10 A/C hose as shown in Figure 13, Page 14, and tighten (See Figure 11, Page 12). **NOTE: The 90° hose fitting connects to the #10 compressor hardline.**
9. Install the heater hoses onto the heater lines, and route as shown in Figures 13 and 13b, Page 14. Secure with hose clamps. **NOTE: This kit does not contain heater hose. The 5/8" heater hose may be purchased from Vintage Air or a local parts retailer.**

Modified Hose Kit:

1. Refer to separate instructions included with modified hose kit.

Liquid Line and Binary Switch Installation

1. Install the #6 liquid line onto the drier with a lubricated #6 O-ring (See Figure 11, Page 12) and tighten (See Figure 11, Page 12, and Figure 13, Page 14).
2. Install the binary switch onto the #6 liquid line (See Figure 13, Page 14).
3. Secure the #6 liquid line to the fender using the supplied Adel clamp (See Figure 13, Page 14).

A/C and Heater Hose Routing

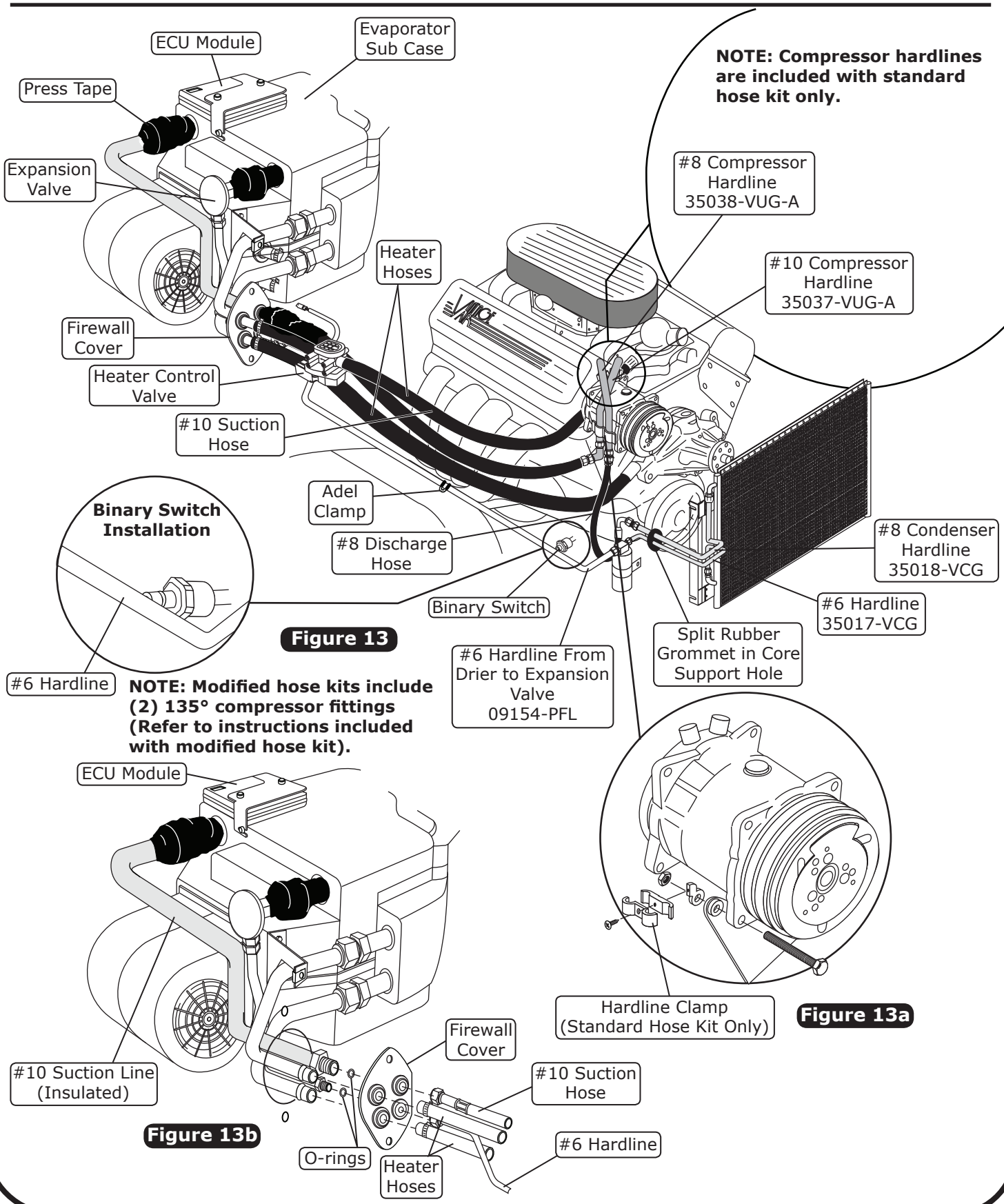

Firewall Cover Installation

1. Pass lines through the firewall cover and secure with (2) 7/16” panel retainers (See Figure 14, below).

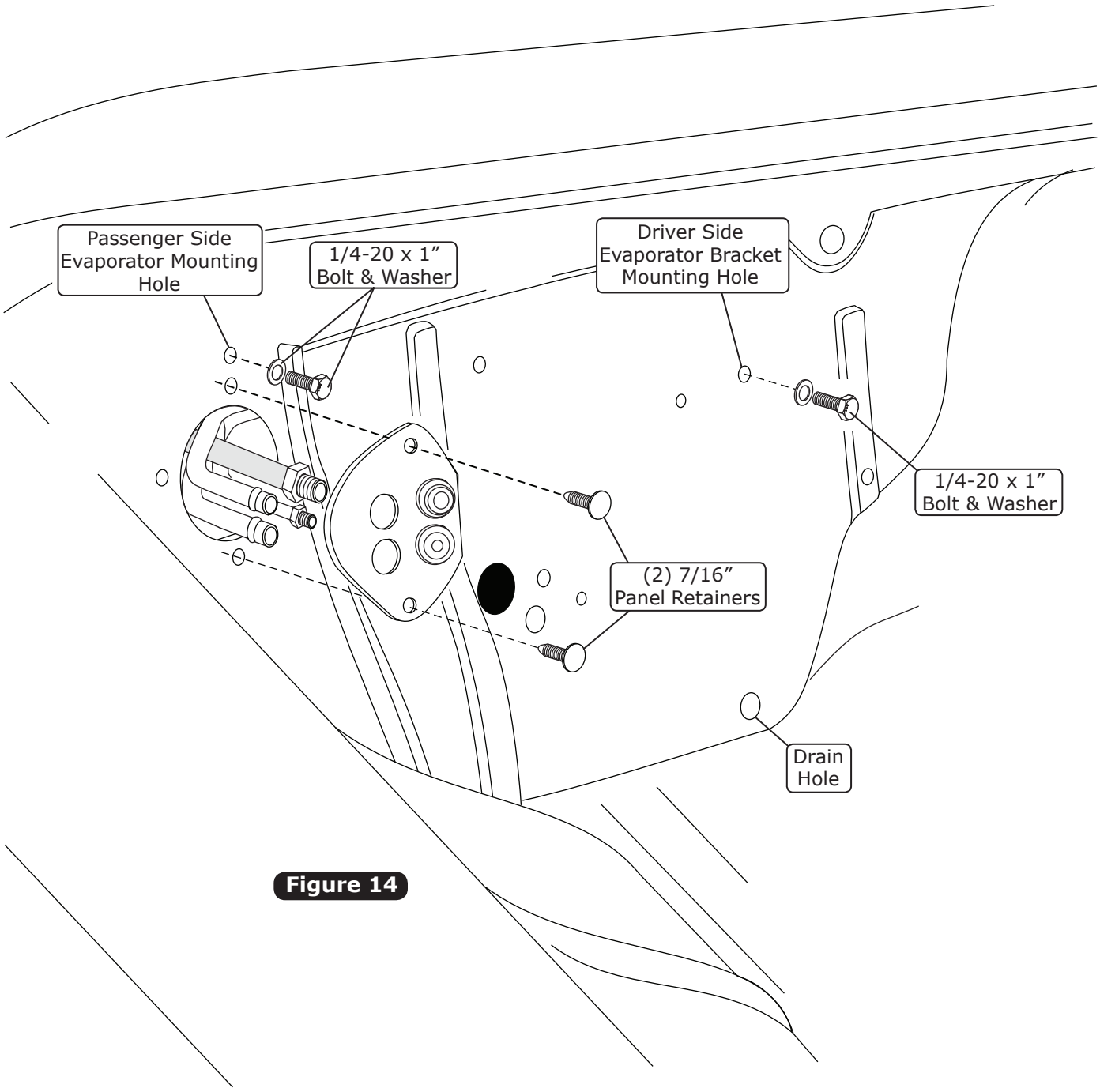

Figure 14

Control Panel & Duct Hose Routing

1. Install the duct hoses as shown in Figure 15, below.
2. Plug the control panel wiring harness (232002-VUA) into the ECU module on the sub case as shown in Figure 15, below.
3. Plug the wiring harness (232001-VUR) into the ECU module on the sub case as shown in Figure 15, below. Wire according to the wiring diagrams on Page 19 and 20.

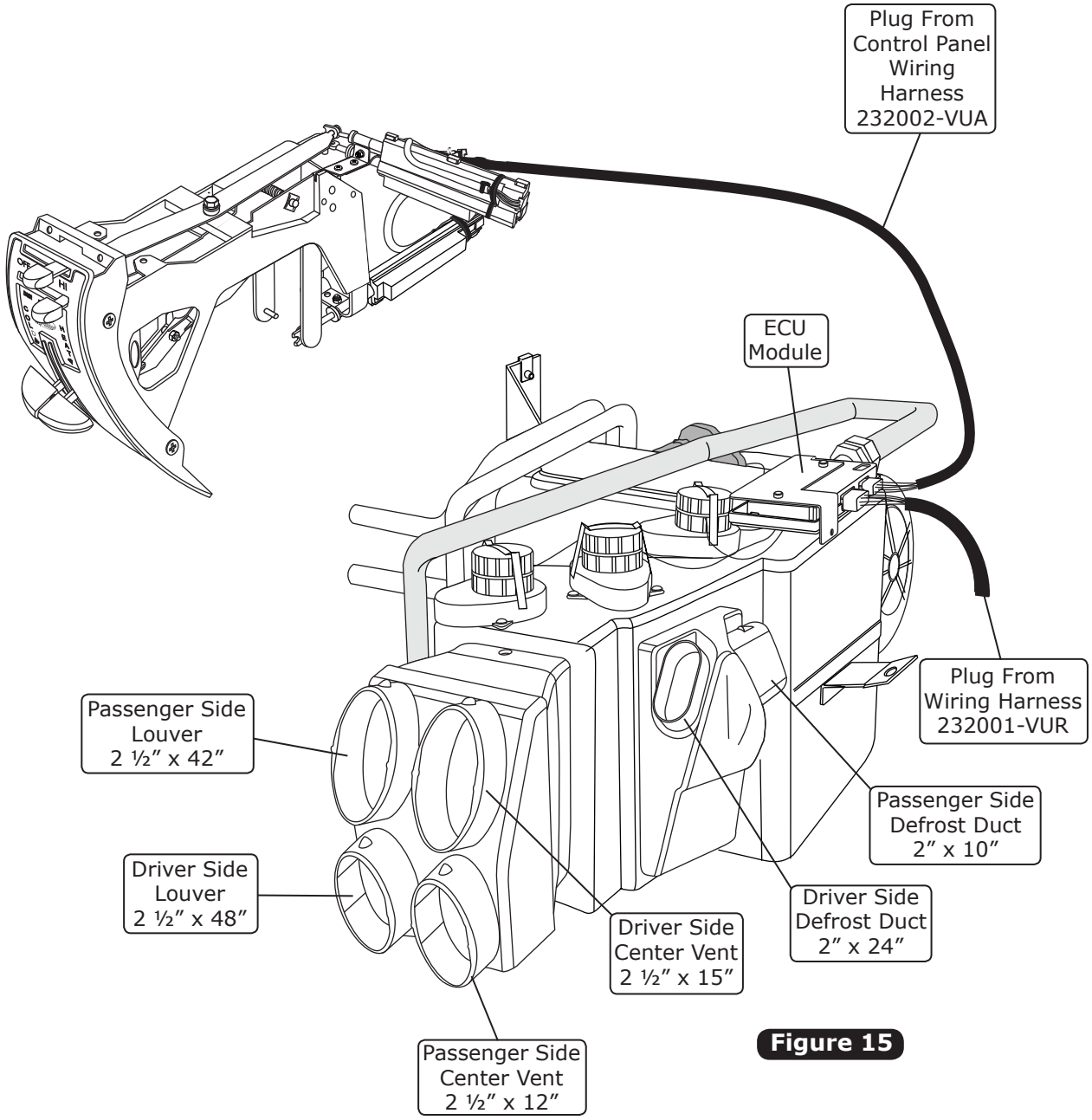

Figure 15

Glove Box Installation

1. Install the glove box bottom and glove box door. Secure to the dash with (3) OEM screws (See Figure 16, below).
2. With the glove box bottom and door in place, install the glove box top as shown in Figure 16, below. Using (3) #6 x 3/8" pan head screws, attach the glove box top to the glove box bottom as shown in Figure 16, below.
3. Secure the glove box top to the dash using (2) OEM screws (See Figure 16, below).

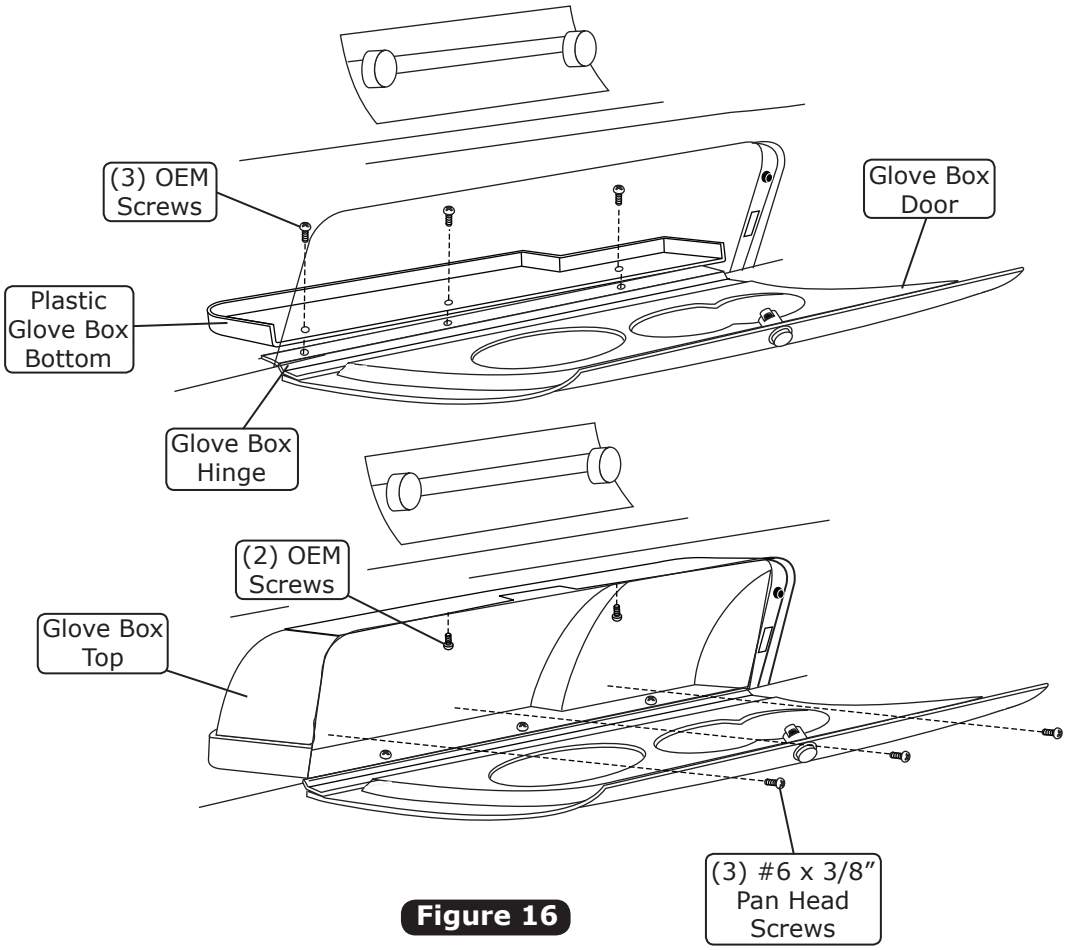

Figure 16

Final Steps

1. Reinstall all previously removed items.
2. Fill radiator with at least a 50/50 mixture of approved antifreeze and distilled water. It is the owner's responsibility to keep the freeze protection at the proper level for the climate in which the vehicle is operated. Failure to follow antifreeze recommendations will cause heater core to corrode prematurely and possibly burst in A/C mode and/or freezing weather, voiding your warranty.
3. Double check all fittings, brackets and belts for tightness.
4. Vintage Air recommends that all A/C systems be serviced by a licensed automotive A/C technician.
5. Evacuate the system for a minimum of 45 minutes prior to charging, and perform a leak check prior to servicing.
6. Charge the system to the capacities stated on Page 4 of this instruction manual.

Evaporator Hardline Installation

NOTE: Wrap the #10 fitting connections with press tape.

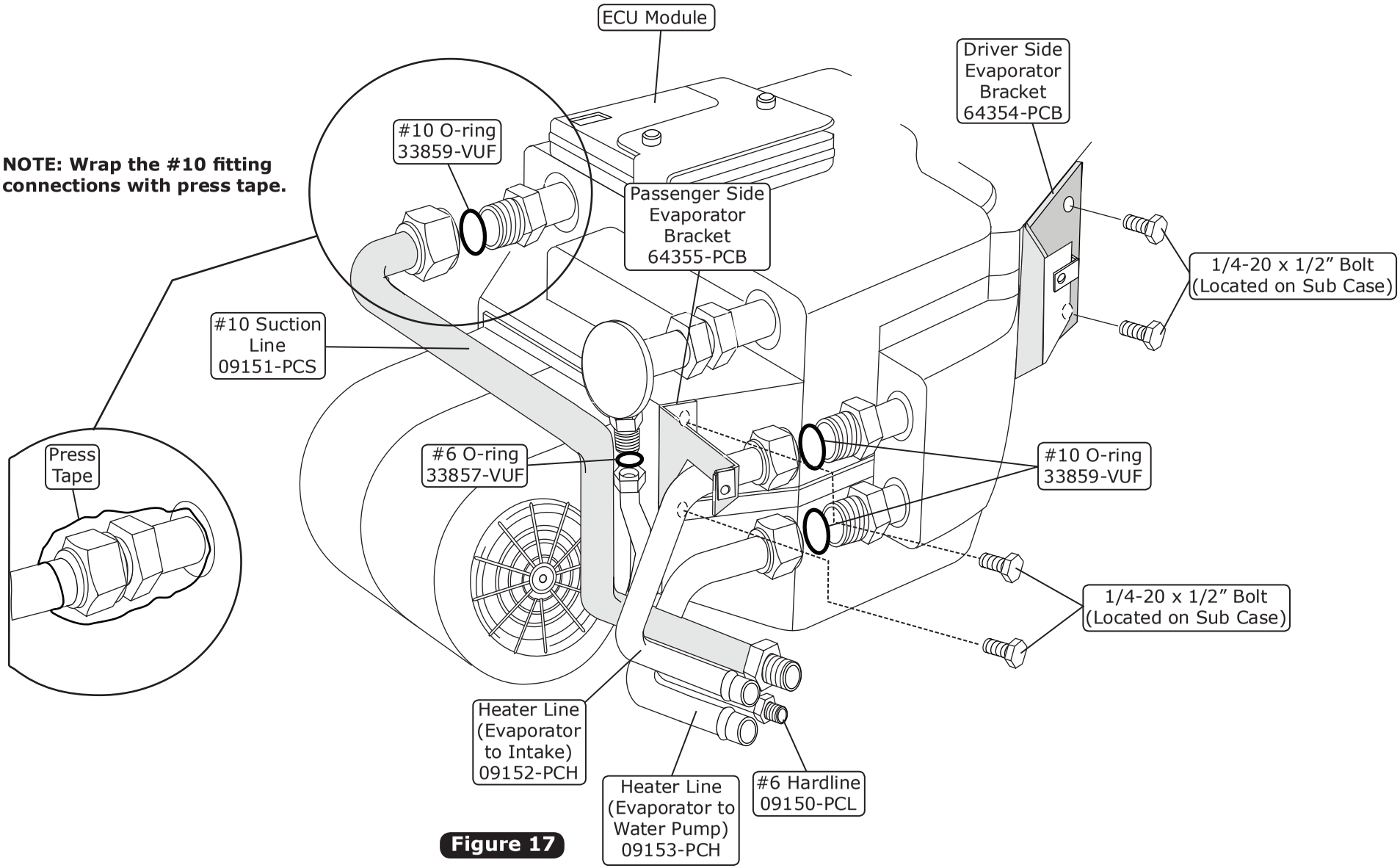

Figure 17

Wiring Diagram

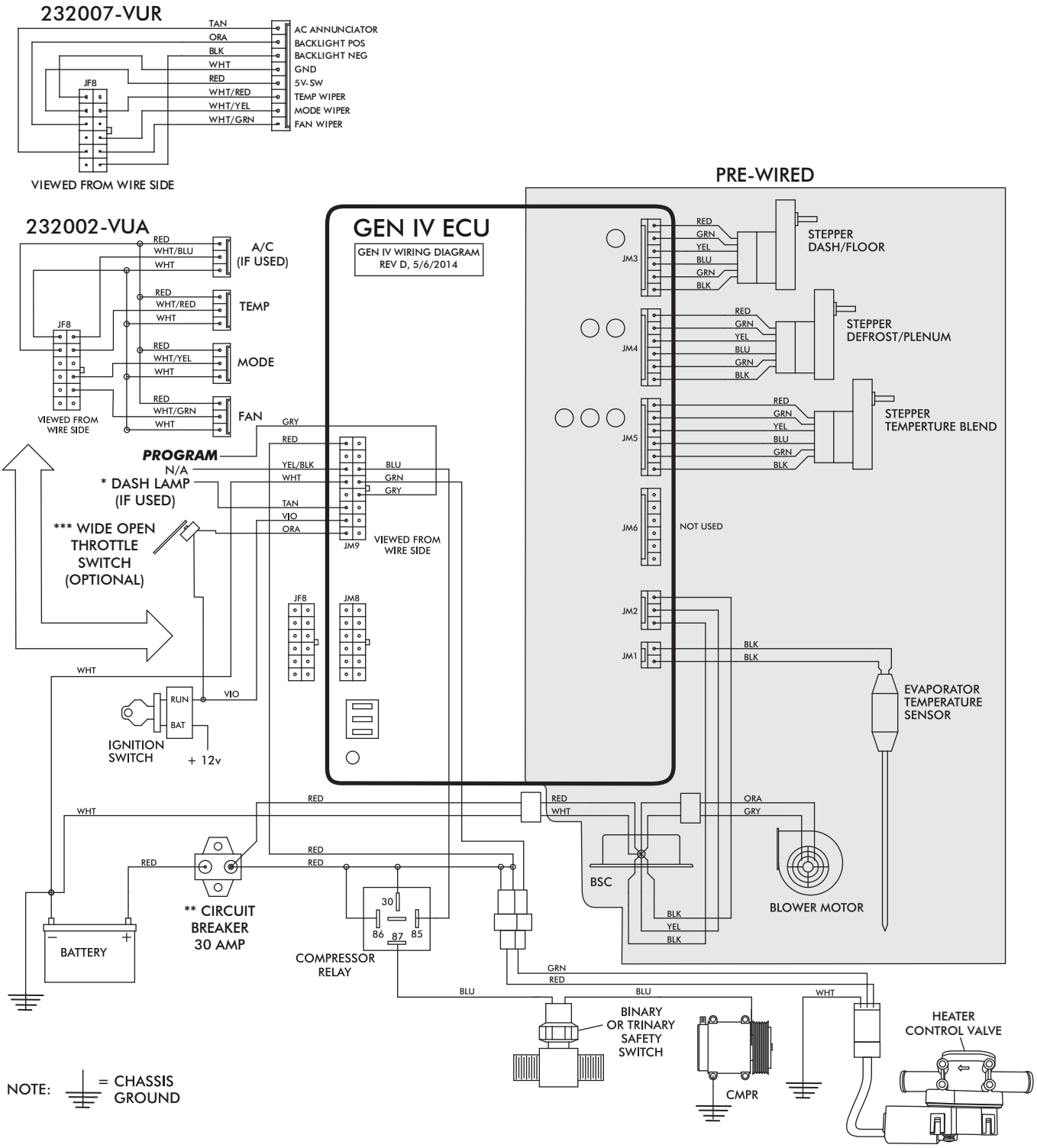

- **Dash Lamp Is Used Only With Type 232007-VUR Harness.**
- **Warning: Always Mount Circuit Breaker As Close to the Battery As Possible. (NOTE: Wire Between Battery and Circuit Breaker Is Unprotected and Should Be Carefully Routed to Avoid a Short Circuit).**
- **Wide Open Throttle Switch Contacts Close Only at Full Throttle, Which Disables A/C Compressor.**

www.vintageair.com

Gen IV Wiring Connection Instruction

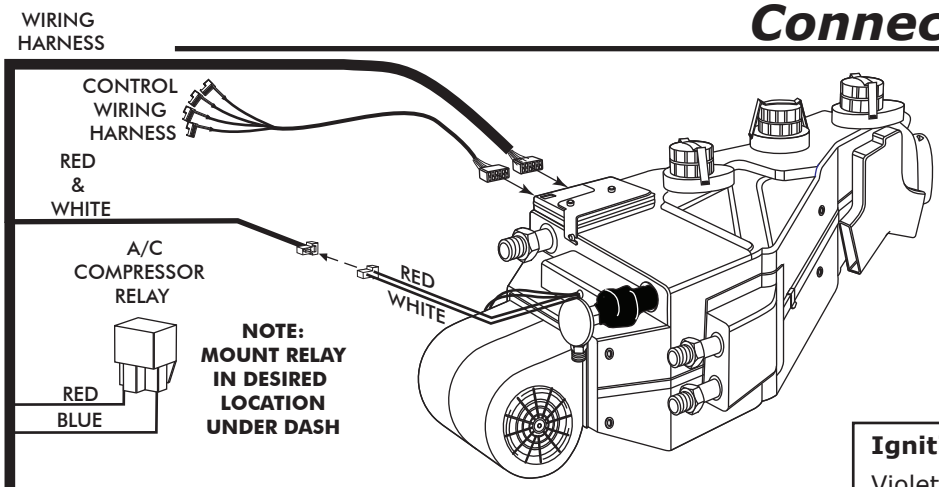

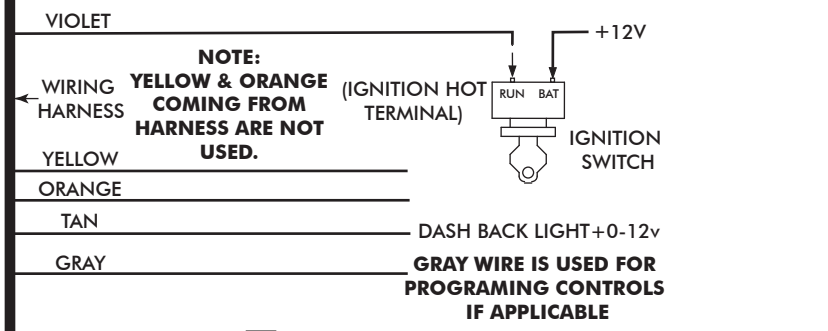

Ignition Switch:

Violet 12V Ign Switch Source (Key On Accessory) Position Must Be Switched.

Dash Light:

Tan Wire Used Only With Vintage Air Supplied Control Panel With LED Back Light.

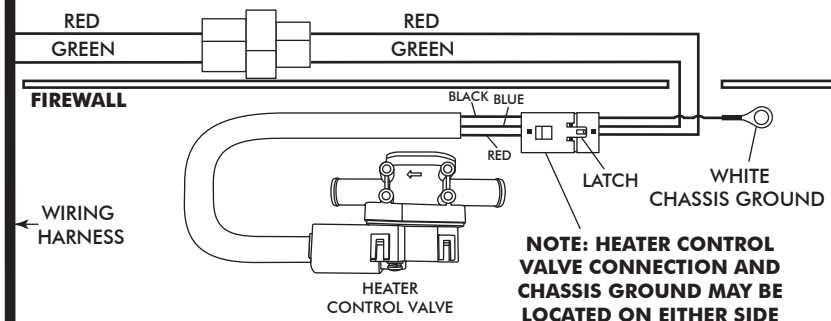

Heater Control Valve:

Install With Servo Motor Facing Down, As Shown. Note Flow Direction Arrow Molded Into Valve Body, And Install Accordingly.

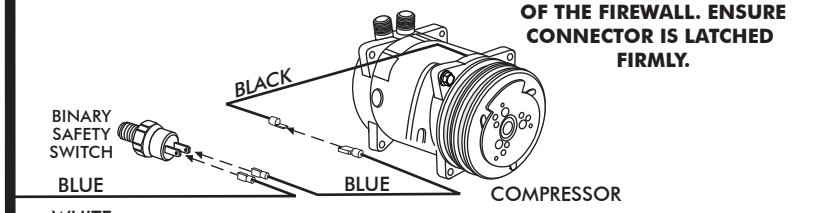

Binary/Trinary & Compressor:

Binary: Connect As Shown (Typical Compressor Wiring). Be Sure Compressor Body Is Grounded.

Trinary Switch: Connect According To Trinary Switch Wiring Diagram.

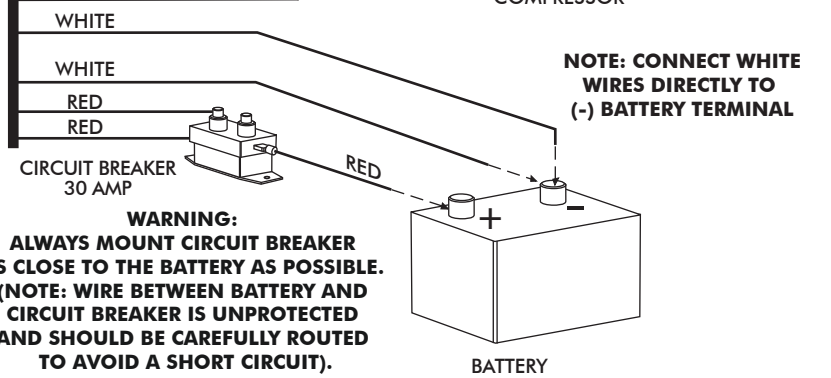

Circuit Breaker/Battery:

White **Must** Run To (-) Battery. Red May Run To (+) Battery Or Starter. Mount Circuit Breaker As Close to Battery As Possible.

Operation of Controls

On Gen IV systems with three lever/knob controls, the temperature control toggles between heat and A/C operations. To activate A/C, move the temperature lever/knob all the way to cold and then back it off to the desired vent temperature. For heat operation, move the temperature lever/knob all the way to hot and then adjust to the desired vent temperature. The blower will momentarily change speed, each time you toggle between operations, to indicate the change. **NOTE: For proper control panel function, refer to control panel instructions for calibration procedure.**

Blower Speed
This lever/knob controls blower speed, from OFF to HI.

Mode Control
This lever/knob controls the mode positions, from DASH to FLOOR to DEFROST, with a blend in between.

Temperature Control
This lever/knob controls the temperature, from HOT to COLD.

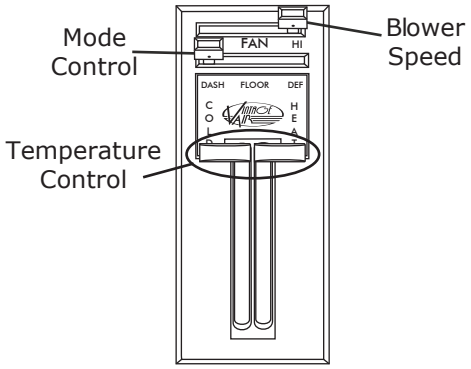

A/C Operation

Blower Speed
Adjust to desired speed.

Mode Control
Adjust to desired mode position (DASH position recommended).

Temperature Control
For A/C operation, adjust to coldest position to engage compressor (Adjust between HOT and COLD to reach desired temperature).

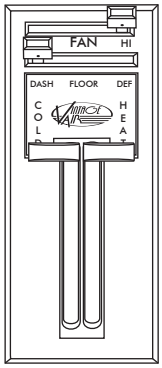

Heat Operation

Blower Speed
Adjust to desired speed.

Mode Control
Adjust to desired mode position (FLOOR position recommended).

Temperature Control
For maximum heating, adjust to hottest position (Adjust between HOT and COLD to reach desired temperature).

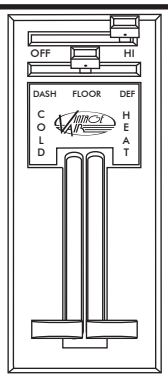

Defrost/De-fog Operation

Blower Speed
Adjust to desired speed.

Temperature Control
Adjust to desired temperature.

Mode Control
Adjust to DEFROST position for maximum defrost, or between FLOOR and DEFROST positions for a bi-level blend (Compressor is automatically engaged).

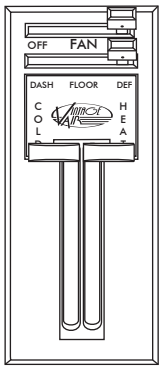

Troubleshooting Guide

Symptom	Condition	Checks	Actions	Notes
1a.				
Blower stays on high speed when ignition is on.	No other functions work.	Check for damaged pins or wires in control head plug.	Verify that all pins are inserted into plug. Ensure that no pins are bent or damaged in ECU.	
		Check for damaged ground wire (white) in control head harness.	Verify continuity to chassis ground with white control head wire at various points.	Loss of ground on this wire renders control head inoperable.
	All other functions work.	Check for damaged blower switch or potentiometer and associated wiring.		See blower switch check procedure.
1b.				
Blower stays on high speed when ignition is on or off.		Unplug 3-wire BSC control connector from ECU. If blower shuts off, ECU is either improperly wired or damaged.	Be sure the small, 20 GA white ground wire is connected to the battery ground post. If it is, replace the ECU.	
		Unplug 3-wire BSC control connector from ECU. If blower stays running, BSC is either improperly wired or damaged.	Check to ensure that no BSC wiring is damaged or shorted to vehicle ground. The BSC operates the blower by ground side pulse width modulation switching. The positive wire to the blower will always be hot. If the "ground" side of the blower is shorted to chassis ground, the blower will run on HI.	
			Replace BSC (This will require removal of evaporator from vehicle).	No other part replacements should be necessary.
2.				
Compressor will not turn on (All other functions work).	System is not charged.	System must be charged for compressor to engage.	Charge system or bypass pressure switch.	**Danger: Never bypass safety switch with engine running. Serious injury can result.**
	System is charged.	Check for faulty A/C potentiometer or associated wiring (Not applicable to 3-pot controls).	Check continuity to ground on white control head wire. Check for 5V on red control head wire.	To check for proper pot function, check voltage at white/blue wire. Voltage should be between 0V and 5V, and will vary with pot lever position.
		Check for disconnected or faulty thermistor.	Check 2-pin connector at ECU housing.	Disconnected or faulty thermistor will cause compressor to be disabled.
3.				
Compressor will not turn off (All other functions work).		Check for faulty A/C potentiometer or associated wiring.	Repair or replace pot/control wiring.	Red wire at A/C pot should have approximately 5V with ignition on. White wire will have continuity to chassis ground. White/ Blue wire should vary between 0V and 5V when lever is moved up or down.
		Check for faulty A/C relay.	Replace relay.	

Troubleshooting Guide (Cont.)

Symptom	Condition	Checks	Actions	Notes
4. System will not turn on, or runs intermittently.	Works when engine is not running; shuts off when engine is started (Typically early Gen IV, but possible on all versions).	Noise interference from either ignition or alternator.	Install capacitors on ignition coil and alternator. Ensure good ground at all points. Relocate coil and associated wiring away from ECU and ECU wiring. Check for burned or loose plug wires.	Ignition noise (radiated or conducted) will cause the system to shut down due to high voltage spikes. If this is suspected, check with a quality oscilloscope. Spikes greater than 16V will shut down the ECU. Install a radio capacitor at the positive post of the ignition coil (See radio capacitor installation bulletin). A faulty alternator or worn out battery can also result in this condition.
	Will not turn on under any conditions.	Verify connections on power lead, ignition lead, and both white ground wires.	Check for positive power at heater valve green wire and blower red wire. Check for ground on control head white wire.	
		Verify battery voltage is greater than 10 volts and less than 16.	Verify proper meter function by checking the condition of a known good battery.	
5. Loss of mode door function.	No mode change at all.	Check for damaged mode switch or potentiometer and associated wiring.		Typically caused by evaporator housing installed in a bind in the vehicle. Be sure all mounting locations line up and don't have to be forced into position.
	Partial function of mode doors.	Check for obstructed or binding mode doors.		
		Check for damaged stepper motor or wiring.		
6. Blower turns on and off rapidly.	Battery voltage is at least 12V.	Check for at least 12V at circuit breaker.	Ensure all system grounds and power connections are clean and tight.	System shuts off blower at 10V. Poor connections or weak battery can cause shutdown at up to 11V.
	Battery voltage is less than 12V.	Check for faulty battery or alternator.	Charge battery.	
7. Erratic functions of blower, mode, temp, etc.		Check for damaged switch or pot and associated wiring.	Repair or replace.	
8. When ignition is turned on, blower momentarily comes on, then shuts off. This occurs with the blower switch in the OFF position.		This is an indicator that the system has been reset. Be sure the red power wire is on the battery post, and not on a switched source. Also, if the system is pulled below 7V for even a split second, the system will reset.	Run red power wire directly to battery.	

Core Support Modification Template

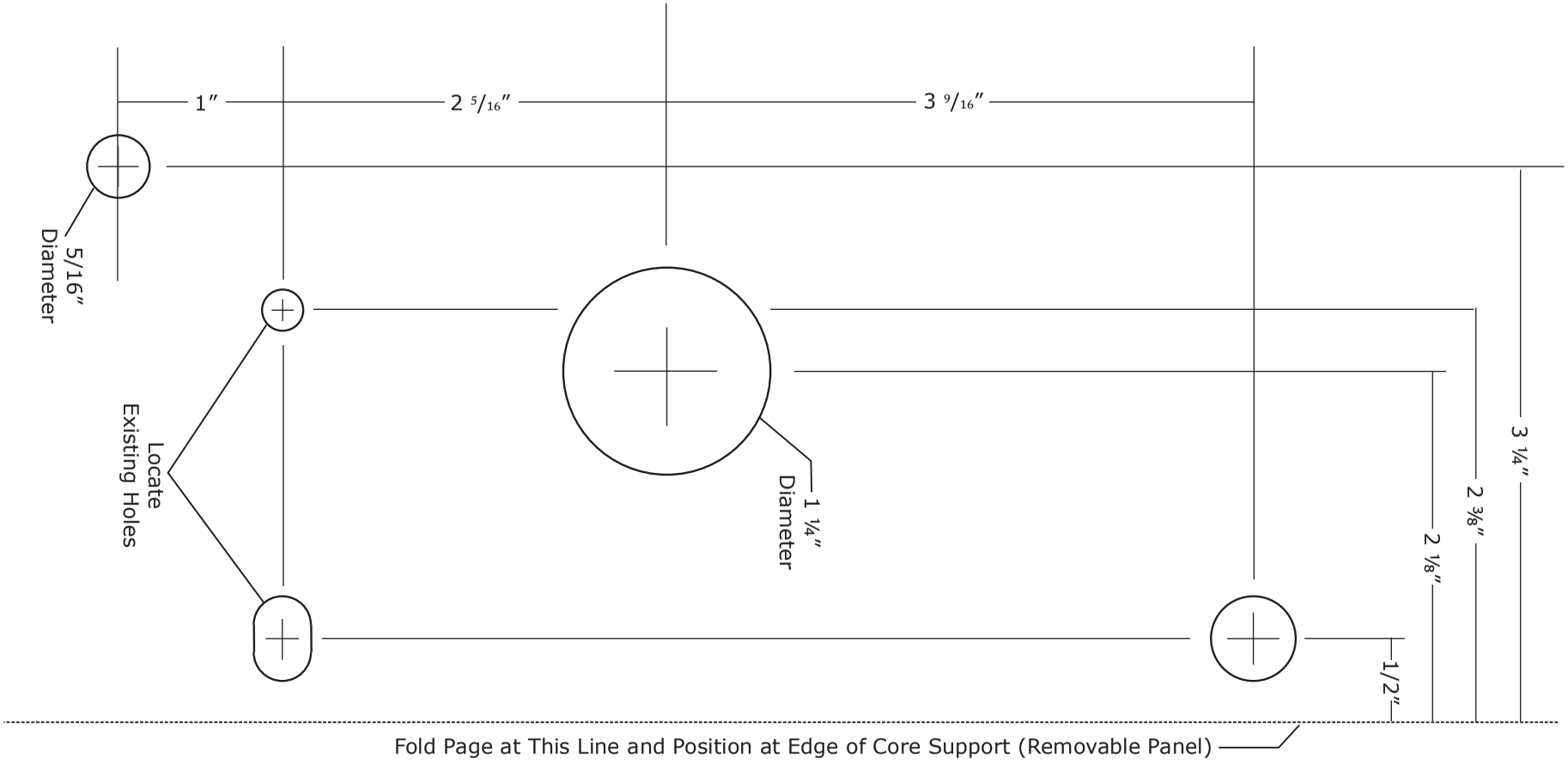

Packing List: Evaporator Kit (56156-PCZ)

No.	Qty.	Part No.	Description	
1.	1	744004-VUE	Gen IV Evaporator Sub Case 4-Vent Plenum with 204 ECU	_____
2.	1	78256-PCN	Accessory Kit	_____

Checked By: _____
Packed By: _____
Date: _____

1

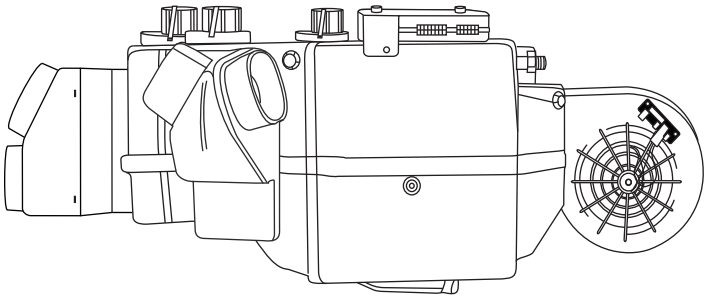

Gen IV Evaporator Sub Case 4-Vent Plenum with 204 ECU 744004-VUE

2

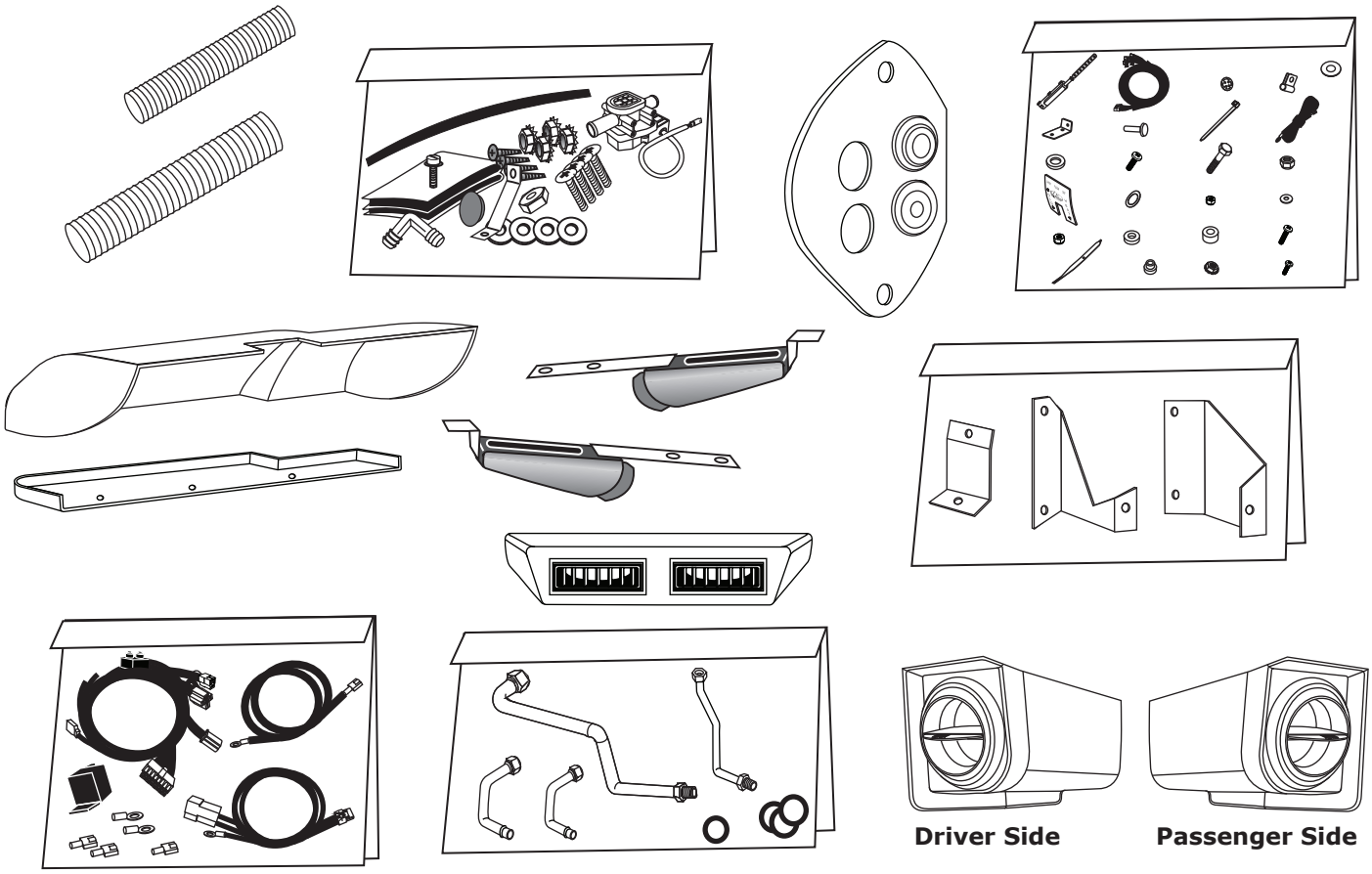

Accessory Kit 78256-PCN

NOTE: Images may not depict actual parts and quantities. Refer to packing list for actual parts and quantities.